SINGLE UPSET SPOOL BOLT

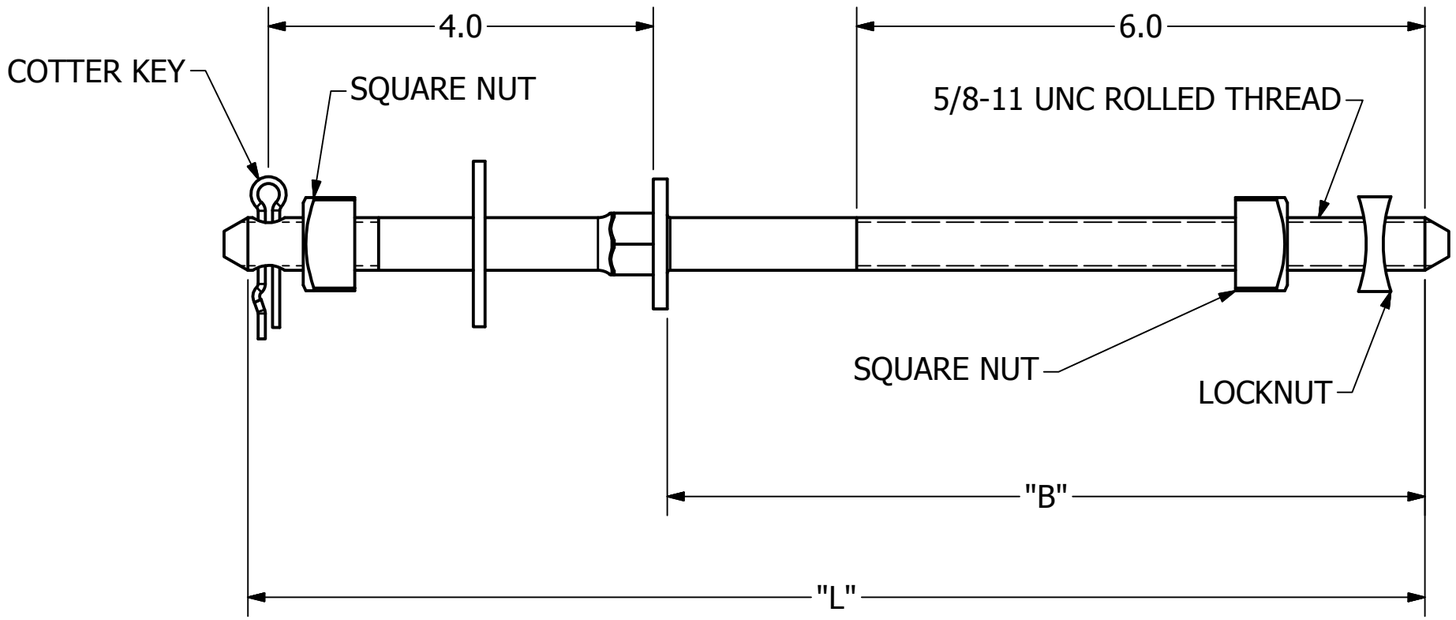

-NOTES-

1. MATERIAL: HOT ROLLED STEEL.
2. HOT DIP GALVANIZED PER ASTM A153 (LATEST REVISION).
3. ALL DIMENSIONS IN INCHES.

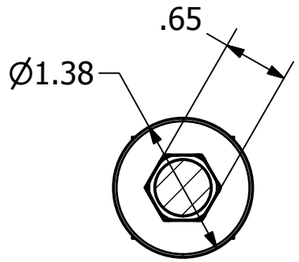

SECTION A
APPLIES TO BOTH

SINGLE UPSET SPOOL BOLTS

CATALOG NUMBER	"B"	"L"
7741	8.00	12.50
774112	9.00	13.50
7742	10.00	14.50
7743	12.00	16.50
7744	14.00	18.50
PS7745	16.00	20.50
PS7746	18.00	22.50
PS7747	20.00	24.50

DOUBLE UPSET SPOOL BOLT

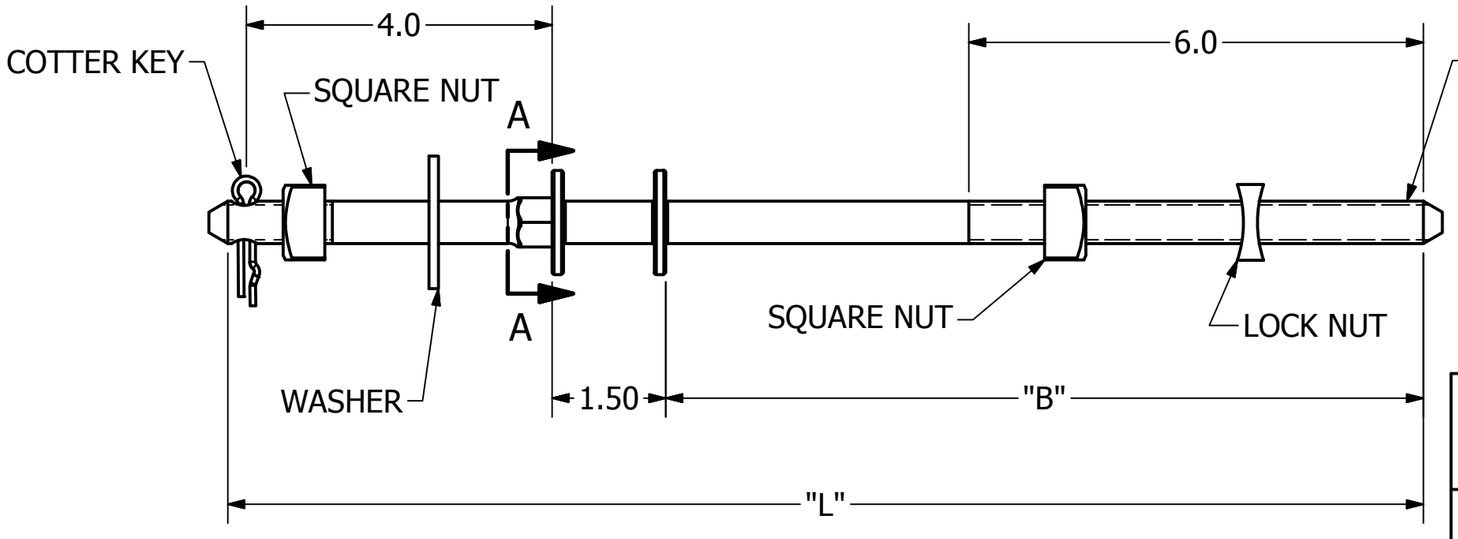

DOUBLE UPSET SPOOL BOLTS

CATALOG NUMBER	"B"	"L"
7826	8.00	13.75
7828	9.00	14.75
7830	12.00	15.75
7832	12.00	17.75
7834	14.00	19.75
PS7836	16.00	21.75
PS7840	20.00	25.75

CHANCE®

CONFIDENTIAL: THIS DRAWING AND ITS CONTENTS ARE CONFIDENTIAL AND THE EXCLUSIVE PROPERTY OF HUBBELL POWER SYSTEMS. NO PUBLICATION, DISTRIBUTION, OR COPIES MAY BE MADE WITHOUT THE WRITTEN CONSENT OF HUBBELL POWER SYSTEMS. HUBBELL POWER SYSTEMS UNPUBLISHED ALL RIGHTS RESERVED UNDER THE COPYRIGHT LAWS.

HUBBELL® POWER SYSTEMS, INC.

HUBBELL POWER SYSTEMS, INC.

TITLE

UPSET SPOOL BOLTS
SINGLE AND DOUBLE

SIZE	CAT / PART / ASSY NO.	DWG NO.	REV
B	SEE CHARTS	SA7740	D

DO NOT SCALE THIS DRAWING	DRN BY TLB	DATE 7/18/19	SHEET 1 OF 1